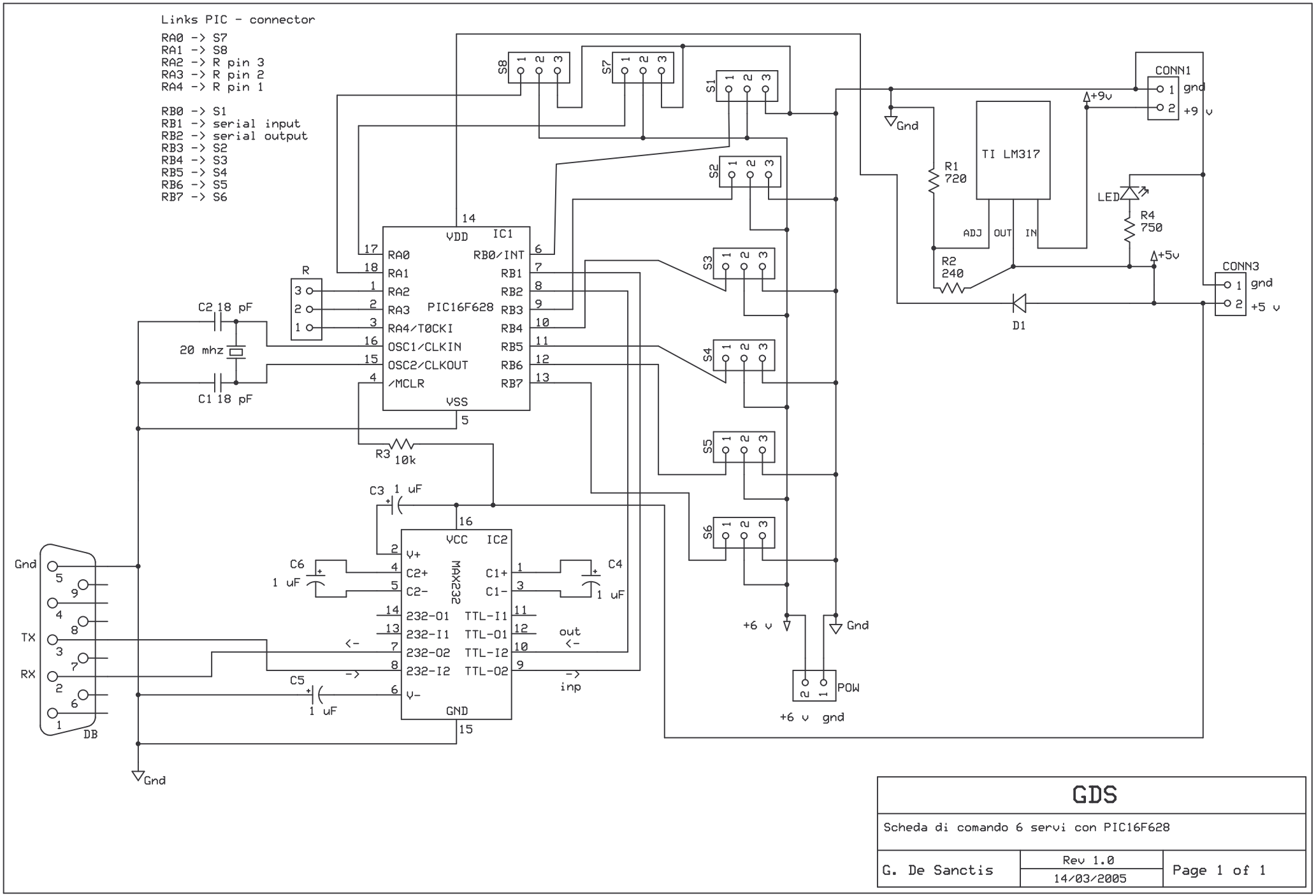
Links PIC - connector
RA0 -> S7
RA1 -> S8
RA2 -> R pin 3
RA3 -> R pin 2
RA4 -> R pin 1
RB0 -> S1
RB1 -> serial input
RB2 -> serial output
RB3 -> S2
RB4 -> S3
RB5 -> S4
RB6 -> S5
RB7 -> S6
IC1
PIC16F628
VDD
VSS
RA0
RA1
RA2
RA3
RA4/T0CKI
OSC1/CLKIN
OSC2/CLKOUT
/MCLR
RB0/INT
RB1
RB2
RB3
RB4
RB5
RB6
RB7
R
C2 18 pF
C1 18 pF
20 mhz
R3 10k
C3 1 uF
IC2
MAX232
VCC
GND
V+
C2+
C2-
C1+
C1-
232-O1
232-I1
232-O2
232-I2
TTL-I1
TTL-O1
TTL-I2
TTL-O2
V-
C6 1 uF
C4 1 uF
C5 1 uF
out
inp
Gnd
TX
RX
DB
S1
S2
S3
S4
S5
S6
S7
S8
+6 v
POW
+6 v gnd
R1 720
R2 240
R4 750
TI LM317
ADJ
OUT
IN
LED
D1
+9v
+5v
CONN1
gnd
+9 v
CONN3
+5 v
GDS
Scheda di comando 6 servi con PIC16F628
G. De Sanctis
Rev 1.0
14/03/2005
Page 1 of 1